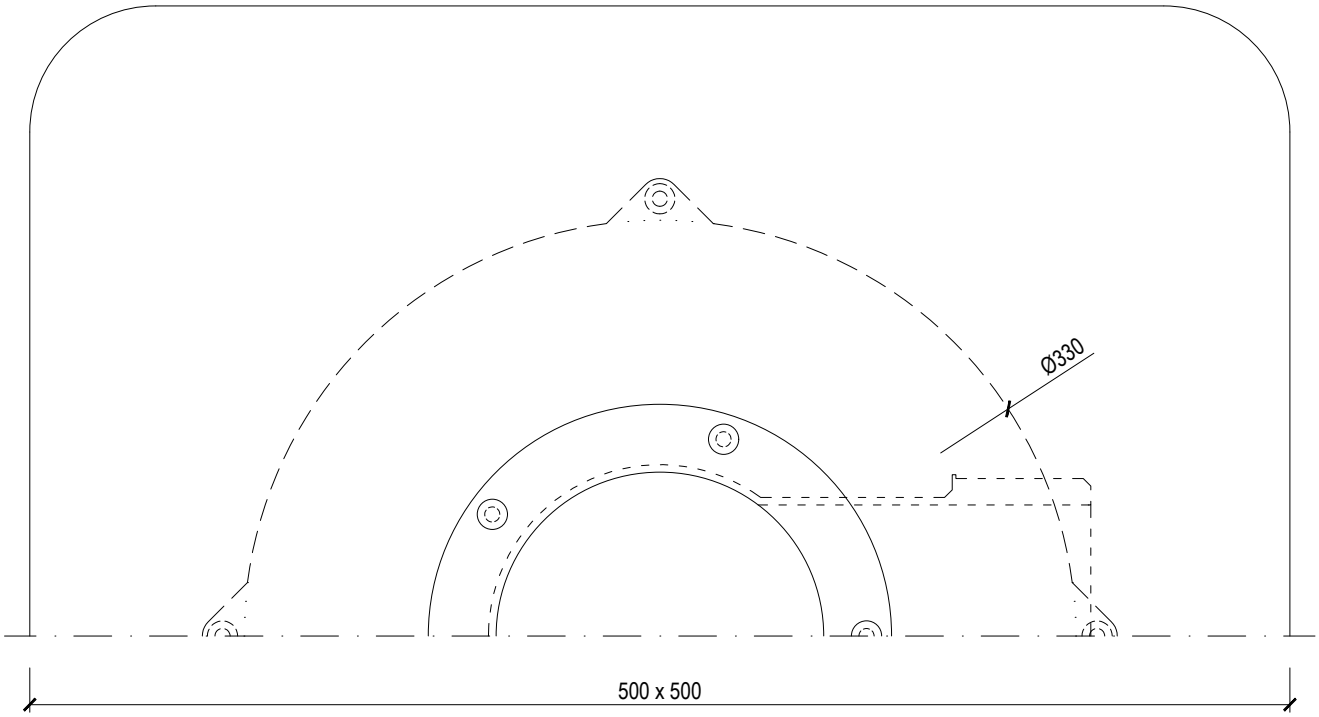

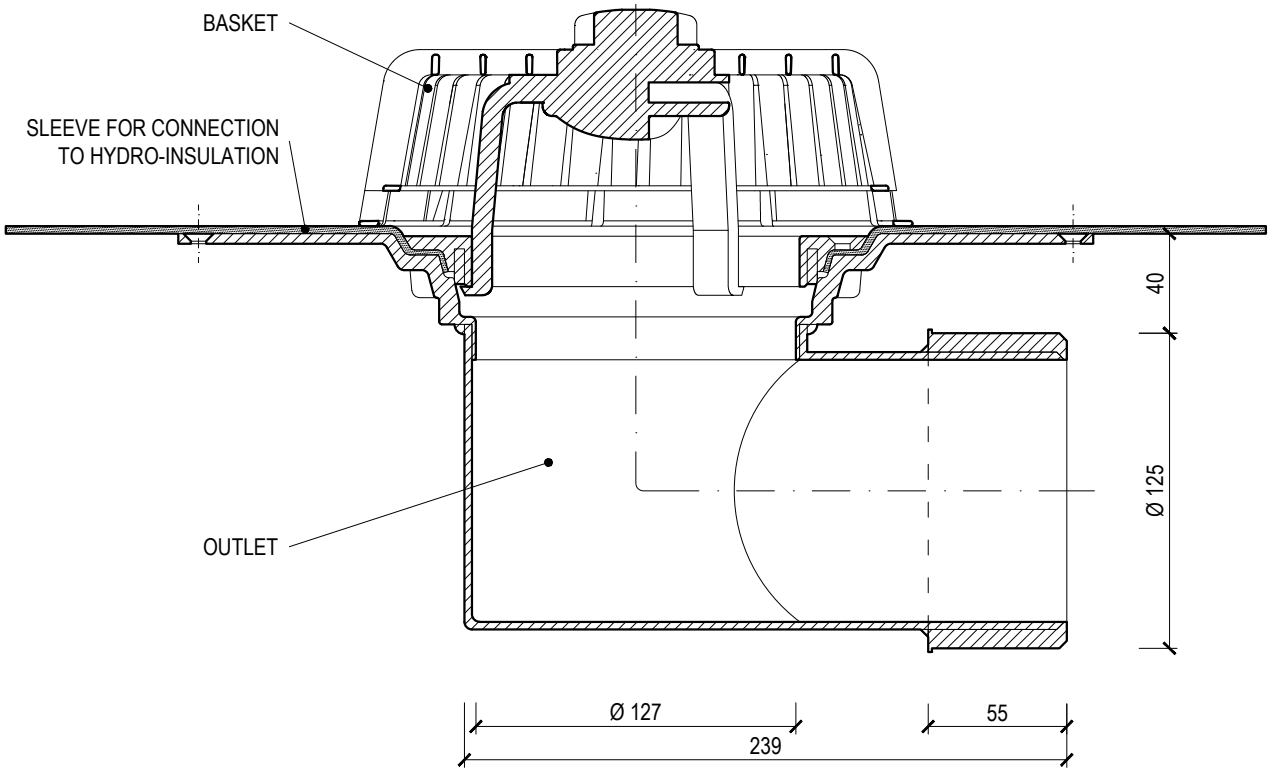

Name	**HORIZONTAL ROOF OUTLET**		
Type	**TW 125 V PVC**	Weight	1,98 kg
Code	201220125	Material	POLYAMIDE
Scale	1:3		

TOPWET® SYSTEMS FOR DRAINAGE OF FLAT ROOFS
info@topwet.cz www.topwet.cz