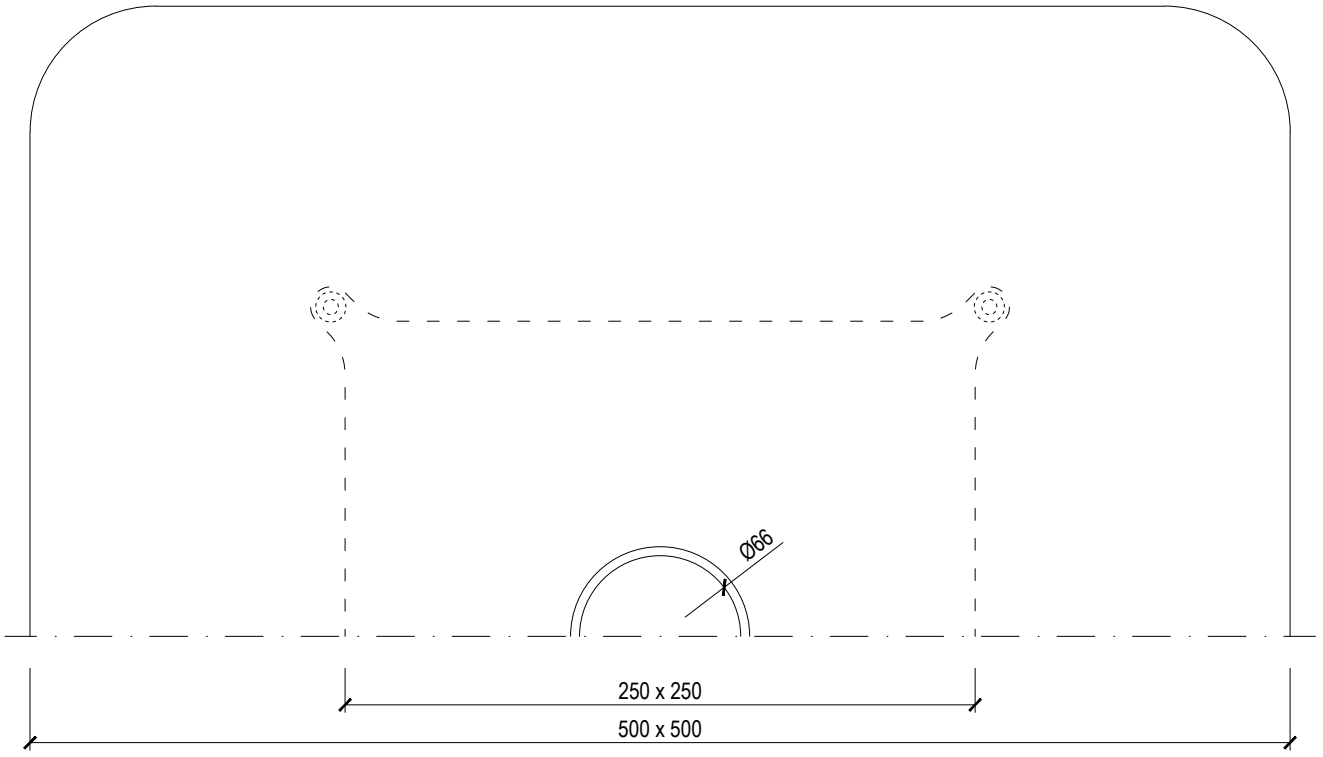

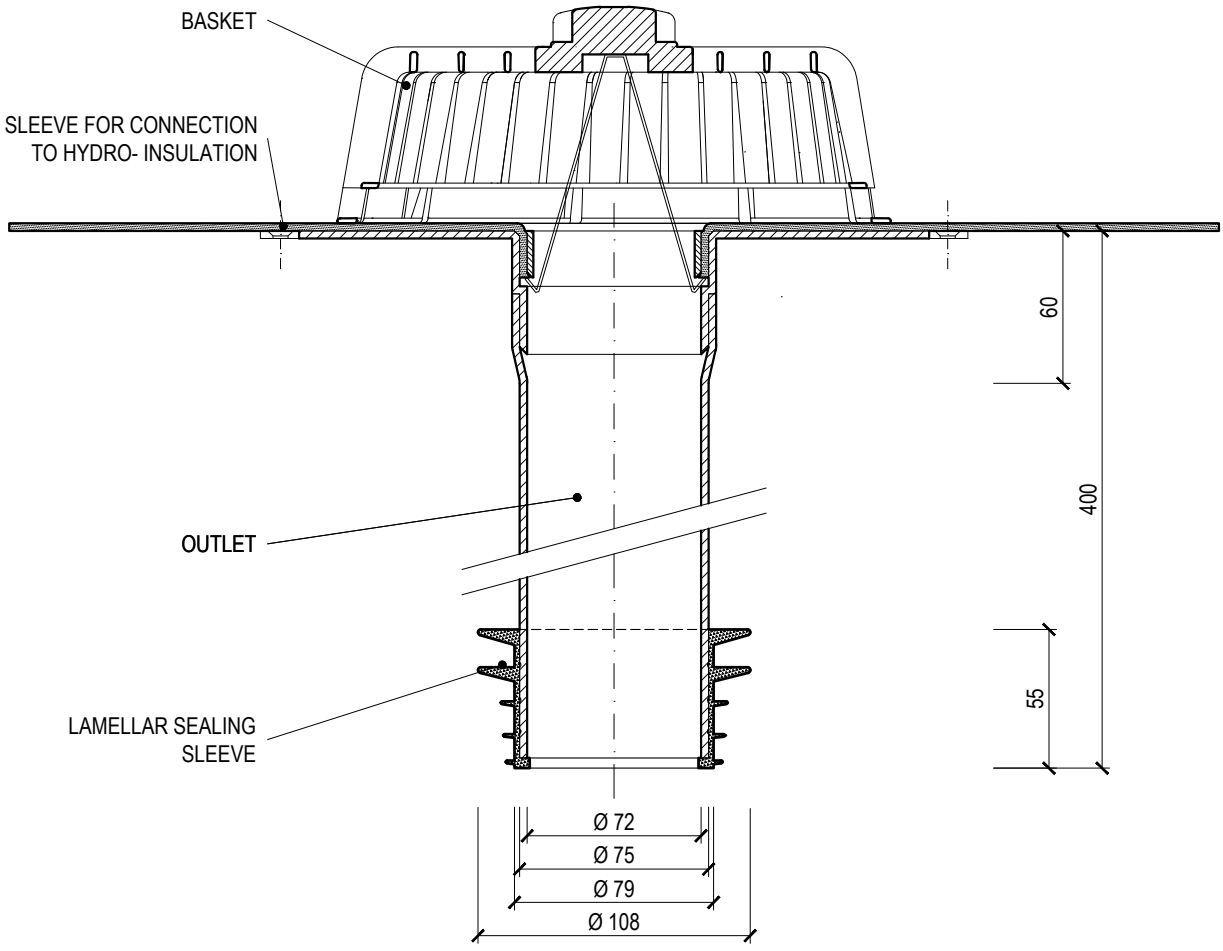

SINGLE-WALL SANITATION OUTLET FOR ROOFS THAT ARE NOT HEAT-INSULATED

TYPE: TW SAN BZ 75 PVC		TOPWET ROOF ELEMENTS
CODE: 217210075	WEIGHT: 1,53 kg	WWW.TOPWET.CZ
SCALE: 1:3	MATERIAL: POLYAMIDE	INFO: +420 777 701 241